# ICC-ES Evaluation Report

**ESR-4464**

*Reissued October 2025*

*Revised July 2026*

*This report remains under an active continuous compliance program through the end of October 2027.*

*This report also contains:*

- **City of LA Supplement**
- **CA Supplement**
- **FL Supplement w/ HVHZ**

*ICC-ES Evaluation Reports are not to be construed as representing aesthetics or any other attributes not specifically addressed, nor are they to be construed as an endorsement of the subject of the report or a recommendation for its use. There is no warranty by ICC Evaluation Service, LLC, express or implied, as to any finding or other matter in this report, or as to any product covered by the report.*

Copyright © 2026 ICC Evaluation Service, LLC. All rights reserved.

| DIVISION: 06 00 00 — WOOD, PLASTICS AND COMPOSITES<br>Section: 06 05 23 — Wood, Plastic, and Composite Fastenings | REPORT HOLDER: MITEK® INC. | EVALUATION SUBJECT: MITEK FIRE WALL HANGERS | |
|---|---|---|---|

## 1.0 EVALUATION SCOPE

**Compliance with the following codes:**

- 2024, 2021, 2018, 2015 and 2012 *International Building Code®* (IBC)
- 2024, 2021, 2018, 2015 and 2012 *International Residential Code®* (IRC)

**Property evaluated:**

Structural

## 2.0 USES

The MiTek Fire Wall Hangers described in this report are structural connectors used for connecting wood framing members in accordance with Section 2304.10.4 of the 2024 and 2021 IBC, Section 2304.10.3 of the 2018 and 2015 IBC and Section 2304.9.3 of the 2012 IBC. The connectors may also be used in structures regulated under the IRC when an engineered design is submitted to, and approved by the code official, in accordance with Section R301.1.3 of the IRC.

## 3.0 DESCRIPTION

### 3.1 FWH Top Mount Fire Wall Hanger:

The FWH Top Mount Fire Wall Hanger is designed for attaching wood truss, wood I-joist, solid sawn lumber, or engineered wood lumber floor framing members to either minimum 2-ply nominal 2-by-6 (38.1 mm by 152.4 mm) wall top plates of wood frame walls (in between wall studs or aligned with wall studs) or 2-ply 2-by (38.1 mm) solid sawn lumber headers, prior to installation of two layers of $^5/_8$-inch-thick (15.9 mm) gypsum wallboard. The maximum center-to-center spacing of the wall framing is 16 inches (406 mm). The FWH Hanger is cold-formed from No. 14 gage steel and is prepunched for 10d common nails for attachment to the wall top plates or headers and 10d-by-$1^1/_2$ (38.1 mm) nails for attachment to framing members, respectively. See Table 1 for product dimensions, fastener schedule and allowable loads. See Figure 1 for an illustration of a typical installation.

### 3.2 FWHBP Fire Wall Hanger:

The FWHBP Fire Wall Hanger for Beams and Purlins is designed for attaching wood truss, solid sawn lumber, or engineered wood lumber framing members to minimum 2-ply nominal 2-by-6 (38.1 mm by 152.4 mm) wall top plates aligned with the post or vertical stud-pack below the wall top plate, prior to installation of two layers of $^5/_8$-inch thick (15.9 mm) gypsum wallboard. The FWHBP Hanger is cold-formed from No. 12 gage steel and is prepunched for 10d common nails for attachment to the top plates, post or stud-pack and framing members.

See Table 2 for product dimensions, fastener schedule and allowable loads. See Figure 2 for an illustration of a typical installation.

**3.3 FWHFM Face Mount Fire Wall Hanger:**

The FWHFM Face Mount Fire Wall Hanger is designed for attaching wood truss, solid sawn lumber, or engineered wood lumber framing members to the wide face of columns, prior to installation of two layers of $^5/_8$-inch thick (15.9 mm) gypsum wallboard. The column width must be equal to or greater than the overall width, L, of the hanger. The FWHFM Hanger is cold-formed from No. 12 gage steel and is prepunched for 10d common nails for attachment to the column face and 10d-by-1½ (38.1 mm) nails for attachment to framing members, respectively. See Table 3 for product dimensions, fastener schedule, and allowable loads. See Figure 3 for an illustration of a typical installation.

**3.4 FWHH Heavy-Duty Fire Wall Hanger:**

The FWHH Heavy-Duty Fire Wall Hanger is designed for attaching wood truss, solid sawn lumber, or engineered wood lumber framing members to minimum 2-ply nominal 2-by-10 (38.1 mm by 235 mm) solid sawn lumber or SCL headers, prior to installation of two layers of $^5/_8$-inch thick (15.9 mm) gypsum wallboard. The FWHH Hanger is cold-formed from No. 12 gage steel and is prepunched for 10d common nails for attachment to the top plates or headers and 10d-by-1½ (38.1 mm) nails for attachment to framing members, respectively. See Table 4 for product dimensions, fastener schedule and allowable load. See Figure 4 for an illustration of a typical installation.

**3.5 FWHL Light Duty Fire Wall Hanger:**

The FWHL Top Mount Light Duty Fire Wall Hanger is designed for attaching wood truss, wood I-joist, solid sawn lumber, or engineered wood lumber floor framing members to minimum 2-ply nominal 2-by-4 wall top plates of wood frame walls prior to installation of two layers of $^5/_8$-inch-thick (15.9 mm) gypsum wallboard. The maximum center-to-center spacing of the wall framing is 16 inches (406 mm). The FWHL hanger is cold-formed from No. 14 gage steel and is prepunched for 10d common nails for attachment to the wall top plates or headers and 10d-by-1½ (38.1 mm) nails for attachment to floor framing members, respectively. See Table 5 for product dimensions, fastener schedule and allowable loads. See Figure 5 for an illustration of a typical installation.

**3.6 Materials:**

**3.6.1 Steel:** The FWH and FWHL Hangers are formed from ASTM A653, SS designation, Grade 40 galvanized steel and have a G90 zinc coating complying with ASTM A653. The FWHBP, FWHFM, and FWHH are formed from ASTM A1011, SS designation, Grade 40 steel and painted with a primer finish. Minimum base-steel thicknesses are as follows:

| GAGE NO. | MINIMUM BASE-STEEL THICKNESS (inch) |
|---|---|
| 14 | 0.070 |
| 12 | 0.099 |

For **SI:** 1 inch = 25.4 mm

**3.6.2 Wood:** Wood members with which the connectors are used must be dimension sawn lumber or structural glued laminated timber with a minimum specific gravity of 0.50, or approved structural engineered wood products (structural composite lumber (SCL) or prefabricated wood I-joists) with a minimum equivalent specific gravity of 0.50, unless otherwise noted in the applicable table within this report. Wood members must have a moisture content not exceeding 19 percent in sawn lumber (16 percent in SCL), except as noted in Section 4.1. For connectors installed with nails, the thickness of each wood member must be sufficient such that the specified fasteners do not protrude through the opposite side of the member, unless otherwise permitted in the applicable table within this report. For installations in SCL, minimum allowable nail spacing and end distance, as specified in an applicable evaluation report for the structural composite lumber, must be met. Refer to Section 3.6.4 for use in treated wood.

**3.6.3 Fasteners:** Required fastener types and sizes for use with the connectors described in this report are specified in this section and in Tables 1 through 5.

**3.6.3.1 Nails:** Nails used for connectors described in this report must be bright or hot-dipped galvanized carbon steel nails complying with material requirements, physical properties, tolerances, workmanship, protective coating and finishes, and packaging and package marking requirements specified in ASTM F1667, and must have length, diameter and bending yield strength as follows:

| FASTENER DESIGNATION | FASTENER LENGTH (inches) | SHANK DIAMETER (inch) | MINIMUM REQUIRED $F_{yb}$ (psi) |
|---|---|---|---|
| 10d-by-1$^1/_2$ | 1.5 | 0.148 | 90,000 |
| 10d Common | 3.0 | 0.148 | 90,000 |

For **SI:** 1 inch = 25.4 mm, 1 psi = 6.895 kPa.

Alternatively, nails of other materials or finishes may be used when they are recognized in an ICC-ES evaluation report as having bending yield strength and withdrawal capacity equal to or greater than those of a bright carbon steel nail of the same nominal diameter.

**3.6.4 Use in Treated Wood:** Connectors and fasteners used in contact with preservative-treated or fire-retardant-treated wood must comply with Section 2304.10.6 of the 2024 and 2021 IBC, Section 2304.10.5 of the 2018 and 2015 IBC, and Section 2304.9.5 of the 2012 IBC, Section R304.3 of the 2024 IRC, and Section R317.3 of the 2021, 2018, 2015 and 2012 IRC, as applicable. The lumber treater or the holder of this report (MiTek), or both, should be contacted for recommendations on the appropriate level of corrosion resistance to specify for the connectors, as well as the connection capacities of the fasteners used with the specific proprietary preservative-treated or fire-retardant-treated lumber. Fasteners used in contact with preservative-treated or fire-retardant-treated wood must be hot-dipped galvanized carbon steel nails. Alternatively, nails of other materials and finishes may be used when they are recognized in an ICC-ES evaluation report for use in the applicable treated lumber and have equivalent or greater capacities as those required in this report.

## 4.0 DESIGN AND INSTALLATION

### 4.1 Design:

The allowable loads in Tables 1 through 5 are based on allowable stress design. The use of the allowable load values for the products listed must comply with all applicable requirements and conditions specified in this report. Tabulated allowable loads are for normal load duration and short load duration, based on load duration factors, $C_D$, in accordance with Section 11.3.2 of the 2024, 2018 and 2015 *National Design Specification*® (NDS) *for Wood Construction* (Section 10.3.2 of the 2012 NDS), as indicated in Tables 1 through 5 of this report. No further increases are permitted for load durations other than those specified. Tabulated allowable loads are for connections in wood seasoned to a maximum moisture content of 19 percent (16 percent for SCL) or less, used under continuously dry conditions and where sustained temperatures are limited to 100°F (37.8°C) or less. When connectors are installed in wood having a moisture content greater than 19 percent (16 percent for SCL), or where the in-service moisture content is expected to exceed this value, the applicable wet service factor, $C_M$, must be applied. Unless otherwise noted in the tables of this report, the applicable wet service factor, $C_M$, is as specified in the NDS for lateral loading of dowel-type fasteners. When connectors are installed in wood that will experience sustained exposure to temperatures exceeding 100°F (37.8°C), the allowable loads in this evaluation report must be adjusted by the temperature factor, $C_t$, specified in Section 11.3.4 of the 2024, 2018 and 2015 NDS (Section 10.3.4 of the 2012 NDS). Group action factor, $C_g$, has been accounted for, in accordance with Section 11.3.6 of the 2024, 2018 and 2015 NDS (Section 10.3.6 of the 2012 NDS), in the tabulated allowable loads, where applicable. Connected wood members must be checked for load-carrying capacity at the connection in accordance with Section 11.1.2 of the 2024, 2018 and 2015 NDS (Section 10.1.2 of the 2012 NDS).

### 4.2 Installation:

Installation of the connectors must be in accordance with this evaluation report and the manufacturer's published installation instructions.

### 4.3 Special Inspection:

**4.3.1 Main Wind-force-resisting Systems under the IBC:** Periodic special inspection must be conducted for components within the main wind force-resisting system, where required in accordance with Sections 1704.2 and 1705.12 of the 2024 and 2021 IBC, Sections 1704.2 and 1705.11 of the 2018 and 2015 IBC, and Sections 1704.2 and 1705.10 of the 2012 IBC, as applicable.

**4.3.2 Seismic-force-resisting Systems under the IBC:** Periodic special inspection must be conducted for components within the seismic force-resisting system, where required in accordance with Sections 1704.2 and 1705.13 of the 2024 and 2021 IBC, Sections 1704.2 and 1705.12 of the 2018 and 2015 IBC, and Sections 1704.2 and 1705.11 of the 2012 IBC, as applicable.

**4.3.3 Installations under the IRC:** Special inspections are normally not required for connectors used in structures regulated under the IRC. However, for components and systems requiring an engineered design in accordance with IRC Section R301, periodic special inspection requirements and exceptions must be in accordance with Sections 4.3.1 and 4.3.2 of this report.

## 5.0 CONDITIONS OF USE:

The MiTek Fire Wall Hangers described in this report comply with, or are suitable alternatives to what is specified in, those codes listed in Section 1.0 of this report, subject to the following conditions:

**5.1** The connectors are manufactured, identified, and installed in accordance with this report and the manufacturer's published installation instructions. A copy of the manufacturer's published installation instructions must be available at the jobsite at all times during installation. In the event of a conflict between this report and the manufacturer's published installation instructions, this report governs.

**5.2** Calculations showing compliance with this report must be submitted to the code official. The calculations must be prepared by a registered design professional where required by the statutes of the jurisdiction in which the project is to be constructed.

**5.3** Connected wood members and fasteners must comply with Sections 3.6.2 and 3.6.3, respectively.

**5.4** Adjustment factors noted in Section 4.1 of this report and the applicable codes must be considered, where applicable.

**5.5** Use of connectors and fasteners with preservative-treated or fire-retardant-treated lumber must be in accordance with Section 3.6.4.

**5.6** Connectors are manufactured at the designated facilities under an approved quality-control program with inspections by ICC-ES.

## 6.0 EVIDENCE SUBMITTED

Data in accordance with ICC-ES Acceptance Criteria for Joist Hangers and Similar Devices (AC13), dated October 2018 (editorially revised February 2024).

## 7.0 IDENTIFICATION

**7.1** Each connector described in this report is identified by the product model (stock) number, the number of the ICC-ES index evaluation report for MiTek (ESR-2685), and by one or more of the following designations: MiTek, USP, or USP Structural Connectors.

**7.2** The report holder's contact information is the following:

**MITEK® INC.**
**16023 SWINGLEY RIDGE ROAD**
**CHESTERFIELD, MISSOURI 63017**
**(800) 328-5934**
**www.mitek-us.com**

**TABLE 1—ALLOWABLE LOADS FOR FWH TOP MOUNT FIRE WALL HANGERS[6,7]**

| STOCK NO. | STEEL GA. | DIMENSIONS (in) | | FASTENER SCHEDULE[5] | | | | | ALLOWABLE LOADS[1,2,3] (lbs) | | | |
|---|---|---|---|---|---|---|---|---|---|---|---|---|
| | | | | Top Plate/Header | | | Joist | | Download | | | Uplift |
| | | W | H | Top Qty. | Face Qty. | Type | Qty | Type | $C_D$ = 1.0 | $C_D$ = 1.15 | $C_D$ = 1.25 | $C_D$ = 1.6 |
| **Installation Between Studs[4]** | | | | | | | | | | | | |
| FWH28 – FWH212 | 14 | $1^{9}/_{16}$ | $7^{1}/_{8}$-$11^{1}/_{8}$ | 6 | --- | 10d | 6 | 10d x $1^{1}/_{2}$ | 2,045 | 2,045 | 2,045 | 180 |
| | | | | | 2 | | | | | | | 380 |
| FWH1795 - FWH1716 | 14 | $1^{13}/_{16}$ | $9^{7}/_{16}$-$15^{15}/_{16}$ | 6 | --- | 10d | 6 | 10d x $1^{1}/_{2}$ | 2,045 | 2,045 | 2,045 | 180 |
| | | | | | 2 | | | | | | | 380 |
| FWH2095 - FWH2016 | 14 | $2^{1}/_{8}$ | $9^{7}/_{16}$-$15^{15}/_{16}$ | 6 | --- | 10d | 6 | 10d x $1^{1}/_{2}$ | 2,045 | 2,045 | 2,045 | 180 |
| | | | | | 2 | | | | | | | 380 |
| FWH2395 - FWH2320 | 14 | $2^{3}/_{8}$ | $9^{7}/_{16}$-$19^{15}/_{16}$ | 6 | --- | 10d | 6 | 10d x $1^{1}/_{2}$ | 2,045 | 2,045 | 2,045 | 180 |
| | | | | | 2 | | | | | | | 380 |
| FWH2595 - FWH2520 | 14 | $2^{9}/_{16}$ | $9^{7}/_{16}$-$19^{15}/_{16}$ | 6 | --- | 10d | 6 | 10d x $1^{1}/_{2}$ | 2,045 | 2,045 | 2,045 | 180 |
| | | | | | 2 | | | | | | | 380 |
| FWH3595 - FWH3524 | 14 | $3^{9}/_{16}$ | $9^{7}/_{16}$-$23^{15}/_{16}$ | 6 | --- | 10d | 6 | 10d x $1^{1}/_{2}$ | 2,045 | 2,045 | 2,045 | 180 |
| | | | | | 2 | | | | | | | 380 |
| **Installation Aligned with Stud[4]** | | | | | | | | | | | | |
| FWH28 - FWH212 | 14 | $1^{9}/_{16}$ | $7^{1}/_{8}$-$11^{1}/_{8}$ | 6 | 4 | 10d | 6 | 10d x $1^{1}/_{2}$ | 2,665 | 2,765 | 2,830 | 380 |
| FWH1795 - FWH1716 | 14 | $1^{13}/_{16}$ | $9^{7}/_{16}$-$15^{15}/_{16}$ | 6 | 4 | 10d | 6 | 10d x $1^{1}/_{2}$ | 2,980 | 2,980 | 2,980 | 380 |
| FWH2095 - FWH2016 | 14 | $2^{1}/_{8}$ | $9^{7}/_{16}$-$15^{15}/_{16}$ | 6 | 4 | 10d | 6 | 10d x $1^{1}/_{2}$ | 2,980 | 2,980 | 2,980 | 380 |
| FWH2395 - FWH2320 | 14 | $2^{3}/_{8}$ | $9^{7}/_{16}$-$19^{15}/_{16}$ | 6 | 4 | 10d | 6 | 10d x $1^{1}/_{2}$ | 2,980 | 2,980 | 2,980 | 380 |
| FWH2595 - FWH2520 | 14 | $2^{9}/_{16}$ | $9^{7}/_{16}$-$19^{15}/_{16}$ | 6 | 4 | 10d | 6 | 10d x $1^{1}/_{2}$ | 2,980 | 2,980 | 2,980 | 380 |
| FWH3595 - FWH3524 | 14 | $3^{9}/_{16}$ | $9^{7}/_{16}$-$23^{15}/_{16}$ | 6 | 4 | 10d | 6 | 10d x $1^{1}/_{2}$ | 2,980 | 2,980 | 2,980 | 380 |
| **Installation on Minimum 2-Ply Solid Sawn Header** | | | | | | | | | | | | |
| FWH28 – FWH212 | 14 | $1^{9}/_{16}$ | $7^{1}/_{8}$-$11^{1}/_{8}$ | 6 | --- | 10d | 6 | 10d x $1^{1}/_{2}$ | 2,405 | 2,405 | 2,405 | 180 |
| | | | | | 2 | | | | 2,625 | 2,625 | 2,625 | 380 |
| FWH1795 - FWH1716 | 14 | $1^{13}/_{16}$ | $9^{7}/_{16}$-$15^{15}/_{16}$ | 6 | --- | 10d | 6 | 10d x $1^{1}/_{2}$ | 2,405 | 2,405 | 2,405 | 180 |
| | | | | | 2 | | | | 2,625 | 2,625 | 2,625 | 380 |
| FWH2095 - FWH2016 | 14 | $2^{1}/_{8}$ | $9^{7}/_{16}$-$15^{15}/_{16}$ | 6 | --- | 10d | 6 | 10d x $1^{1}/_{2}$ | 2,405 | 2,405 | 2,405 | 180 |
| | | | | | 2 | | | | 2,625 | 2,625 | 2,625 | 380 |
| FWH2395 - FWH2320 | 14 | $2^{3}/_{8}$ | $9^{7}/_{16}$-$19^{15}/_{16}$ | 6 | --- | 10d | 6 | 10d x $1^{1}/_{2}$ | 2,405 | 2,405 | 2,405 | 180 |
| | | | | | 2 | | | | 2,625 | 2,625 | 2,625 | 380 |
| FWH2595 - FWH2520 | 14 | $2^{9}/_{16}$ | $9^{7}/_{16}$-$19^{15}/_{16}$ | 6 | --- | 10d | 6 | 10d x $1^{1}/_{2}$ | 2,405 | 2,405 | 2,405 | 180 |
| | | | | | 2 | | | | 2,625 | 2,625 | 2,625 | 380 |
| FWH3595 - FWH3524 | 14 | $3^{9}/_{16}$ | $9^{7}/_{16}$-$23^{15}/_{16}$ | 6 | --- | 10d | 6 | 10d x $1^{1}/_{2}$ | 2,405 | 2,405 | 2,405 | 180 |
| | | | | | 2 | | | | 2,625 | 2,625 | 2,625 | 380 |

**For SI:** 1 inch = 25.4 mm, 1 lbf = 4.45 N

[1]Allowable loads have been adjusted for load duration factors, $C_D$, as shown, in accordance with the NDS. The allowable loads do not apply to loads of other durations, and are not permitted to be adjusted for other load durations. See Sections 4.1 and 4.2 for additional design and installation requirements.
[2]Allowable loads shown are for installations on wood members complying with Section 3.6.2. Wood members must have a minimum reference compression perpendicular to grain design value, $F_{c\text{-}perp}$, of 625 psi (4.31 MPa).
[3]The tabulated allowable loads are for hangers prior to the attachment of wall and floor sheathing.
[4]The allowable loads for an "Installation Aligned with Stud" are applicable only to FWH hangers installed on the top plate of a stud wall with a wall stud aligned directly below and behind the hanger. For installation of FWH hangers on a stud wall not directly aligned with a wall stud, use allowable loads in the "Installation Between Studs" section of Table 1.
[5]See Section 3.6.3 for required fastener dimensions and mechanical properties.
[6]Web stiffeners are required in I-Joist installations.
[7]FWH hangers provide torsional resistance, which is defined as a moment of not less than 75 pounds (334 N) times the depth of the carried member at which the lateral movement of the top or bottom of the carried member with respect to the vertical position is 0.125 inch (3.2 mm). Trusses of all depths shall be braced to prevent rotation and to provide lateral stability as specified in the contract documents based on the requirements of the code.

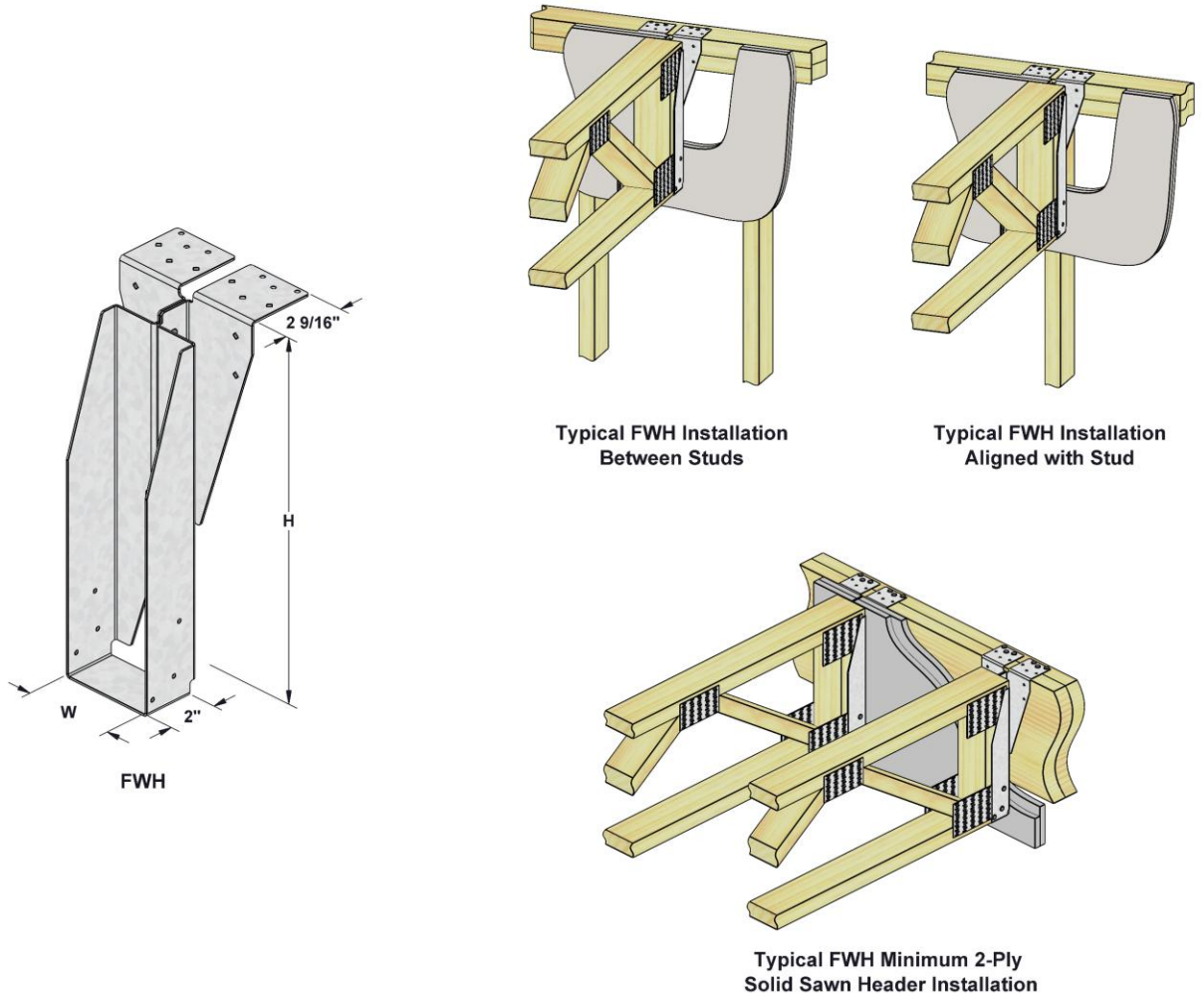


**FIGURE 1—FWH TOP MOUNT FIRE WALL HANGER AND TYPICAL INSTALLATIONS ON STUD WALL AND SOLID SAWN HEADER**

**TABLE 2—ALLOWABLE LOADS FOR FWHBP FIRE WALL HANGERS[5]**

| STOCK NO. | DIMENSIONS (in.) | | | | FASTENER SCHEDULE[4] | | | | | | ALLOWABLE LOADS[1,2,3] (lbs) | | | |
|---|---|---|---|---|---|---|---|---|---|---|---|---|---|---|
| | | | | | Wall Framing | | | | Joist | | Download | | | Uplift |
| | | | | | Top Plate | | | | | | | | | |
| | W1 | W2 | H | L | Top Qty. | Face Qty. | Stud | Type | Qty | Type | $C_D$=1.0 | $C_D$=1.15 | $C_D$=1.25 | $C_D$ = 1.6 |
| FWHBP35118 - FWHBP3524 | $3^{9}/_{16}$ | $3^{1}/_{8}$ | $11^{13}/_{16}$ - $23^{15}/_{16}$ | $7^{1}/_{8}$ | 6 | 4 | 16 | 10d | 18 | 10d | 7,055 | 7,355 | 7,550 | 3,045 |
| FWHBP52118 - FWHBP5224 | $5^{3}/_{8}$ | $3^{1}/_{8}$ | $11^{13}/_{16}$ - $23^{15}/_{16}$ | $7^{15}/_{16}$ | 6 | 4 | 16 | 10d | 18 | 10d | 8,005 | 8,005 | 8,005 | 3,045 |
| FWHBP71118 - FWHBP7124 | $7^{1}/_{8}$ | $3^{1}/_{8}$ | $11^{13}/_{16}$ - $23^{15}/_{16}$ | $9^{11}/_{16}$ | 6 | 4 | 16 | 10d | 18 | 10d | 5,660 | 5,660 | 5,660 | 3,045 |

**For SI**: 1 inch = 25.4mm, 1 lbs. = 4.45 N

[1]The tabulated allowable loads have been adjusted for load duration factors, $C_D$, as shown, in accordance with the NDS. The allowable loads do not apply to loads of other durations and are not permitted to be adjusted for other load durations. See Sections 4.1 and 4.2 for additional design and installation requirements.
[2]Allowable loads shown are for installations on wood members complying with Section 3.6.2. Wood members must have a minimum reference compression perpendicular to grain design value, $F_{c\text{-perp}}$, of 625 psi (4.31 MPa).
[3]The tabulated allowable loads are for hangers prior to the attachment of wall and floor sheathing.
[4]See Section 3.6.3 for the required fastener dimensions and mechanical properties.
[5]FWHBP hangers provide torsional resistance, which is defined as a moment of not less than 75 pounds (334 N) times the depth of the carried member at which the lateral movement of the top or bottom of the carried member with respect to the vertical position is 0.125 inch (3.2 mm). Trusses of all depths shall be braced to prevent rotation and to provide lateral stability as specified in the contract documents based on the requirements of the code.

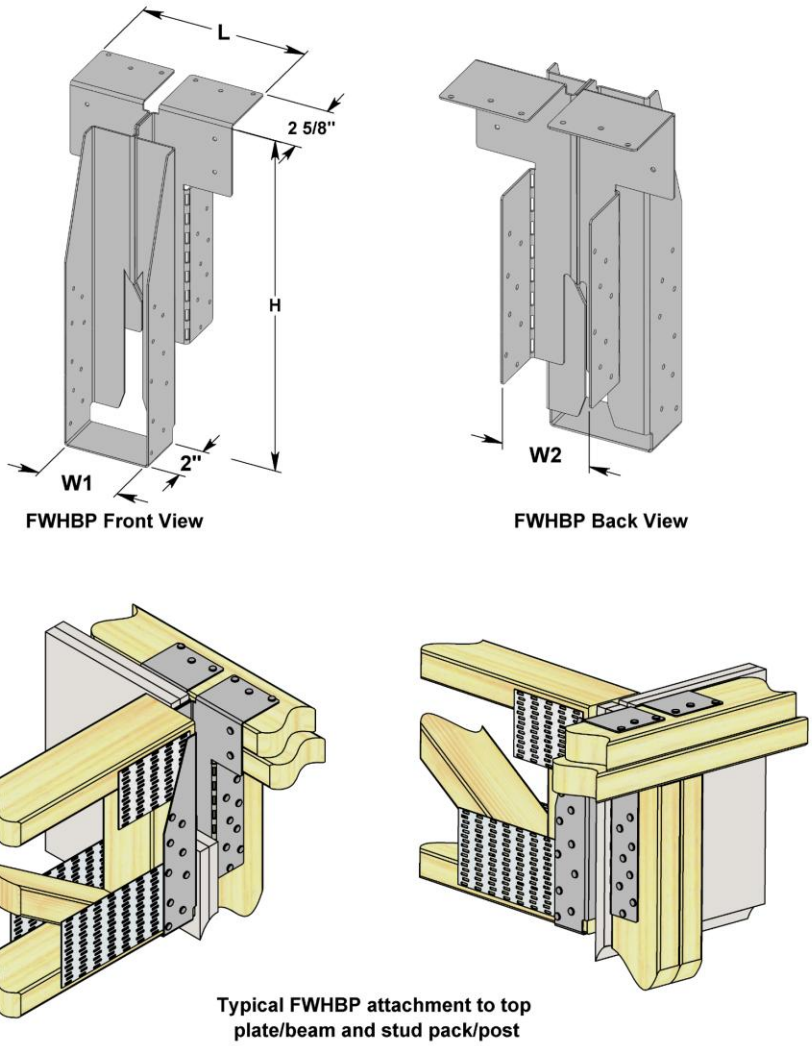


**FIGURE 2—FWHBP FIRE WALL HANGER AND TYPICAL INSTALLATION**

**TABLE 3—ALLOWABLE LOADS FOR FWHFM FACE MOUNT FIRE WALL HANGERS[6]**

| STOCK NO. | DIMENSIONS (in.) | | | FASTENER SCHEDULE[5] | | | | ALLOWABLE LOADS[1,2,3,4] (lbs) | | | |
|---|---|---|---|---|---|---|---|---|---|---|---|
| | W | H | L | Post/Stud | | Joist | | Download | | | Uplift |
| | | | | Face Qty. | Type | Qty | Type | $C_D$ = 1.0 | $C_D$ = 1.15 | $C_D$ = 1.25 | $C_D$ = 1.6 |
| FWHFM35925 - FWHFM3524 | $3^{9}/_{16}$ | $9^{1}/_{16}$ – $23^{13}/_{16}$ | $4^{11}/_{16}$ | 40 | 10d | 18 | 10d x $1^{1}/_{2}$ | 5,960 | 6,625 | 7,050 | 2,820 |
| FWHFM42925 - FWHFM4224 | $4^{3}/_{16}$ | $9^{1}/_{16}$ – $23^{5}/_{8}$ | $5^{5}/_{16}$ | 40 | 10d | 18 | 10d x $1^{1}/_{2}$ | 5,960 | 6,625 | 7,050 | 2,820 |
| FWHFM52925 - FWHFM5224 | $5^{5}/_{8}$ | $8^{7}/_{8}$ – $23^{13}/_{16}$ | $6^{1}/_{2}$ | 40 | 10d | 18 | 10d x $1^{1}/_{2}$ | 5,960 | 6,625 | 7,050 | 2,820 |
| FWHFM71118 - FWHFM7124 | $7^{1}/_{8}$ | $11^{1}/_{2}$ – $23^{5}/_{8}$ | $8^{1}/_{4}$ | 40 | 10d | 18 | 10d x $1^{1}/_{2}$ | 5,960 | 6,085 | 6,085 | 2,820 |

**For SI:** 1 inch = 25.4mm, 1 lbs. = 4.45 N

[1]The tabulated allowable loads have been adjusted for load duration factors, $C_D$, as shown, in accordance with the NDS. The allowable loads do not apply to loads of other durations, and are not permitted to be adjusted for other load durations. See Sections 4.1 and 4.2 for additional design and installation requirements.

[2]Allowable loads shown are for installations on wood members complying with Section 3.6.2. Wood members must have a minimum reference compression perpendicular to grain design value, $F_{c\text{-perp}}$, of 625 psi (4.31 MPa).

[3]The tabulated allowable loads are for hangers attached to the wide face of a supporting column, having a width equal to or greater than the overall width, L, of the hanger.

[4]The tabulated allowable loads are for hangers prior to the attachment of wall and floor sheathing.

[5]See Section 3.6.3 for the required fastener dimensions and mechanical properties.

[6]FWHFM hangers provide torsional resistance, which is defined as a moment of not less than 75 pounds (334 N) times the depth of the carried member at which the lateral movement of the top or bottom of the carried member with respect to the vertical position is 0.125 inch (3.2 mm). Trusses of all depths shall be braced to prevent rotation and to provide lateral stability as specified in the contract documents based on the requirements of the code.

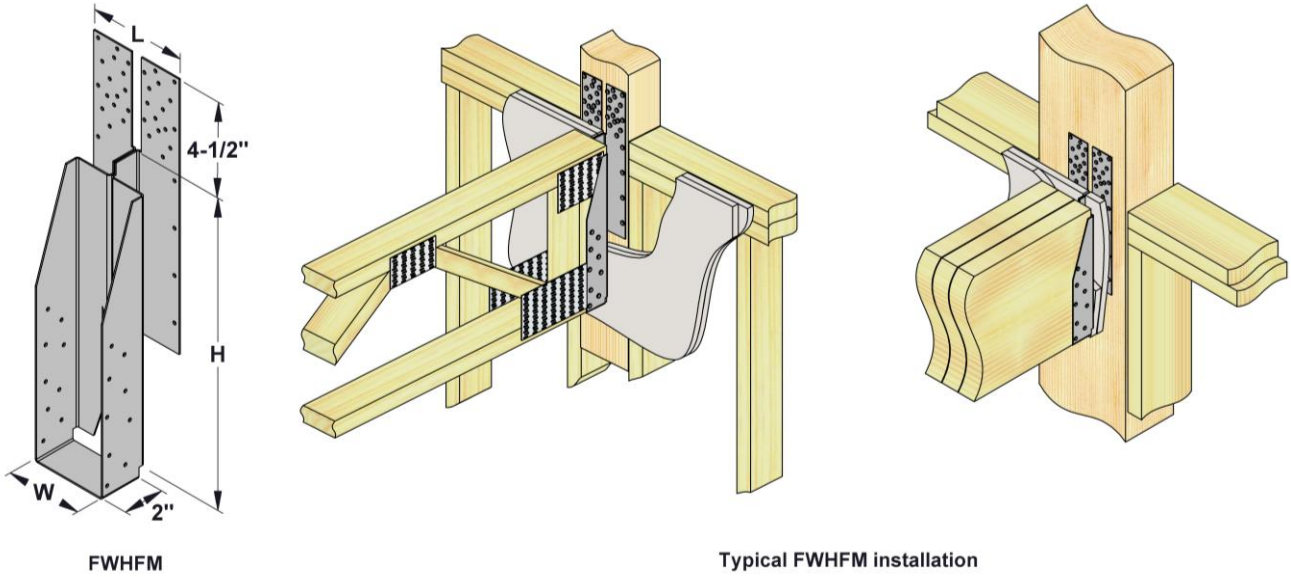


**FIGURE 3—FWHFM FACE MOUNT FIRE WALL HANGER AND TYPICAL INSTALLATION**

**TABLE 4—ALLOWABLE LOADS FOR FWHH HEAVY-DUTY FIRE WALL HANGERS[6]**

| STOCK NO. | DIMENSIONS (in.) | | | FASTENER SCHEDULE[5] | | | | | ALLOWABLE LOADS[1,2,3,4] (lbs.) | | | |
|---|---|---|---|---|---|---|---|---|---|---|---|---|
| | W | H | L | Header | | | Joist | | Download | | | Uplift |
| | | | | Top Qty. | Face Qty. | Type | Qty | Type | $C_D$=1.0 | $C_D$=1.15 | $C_D$=1.25 | $C_D$=1.6 |
| FWHH3595 - FWHH3524 | $3^{9}/_{16}$ | $9^{7}/_{16}$ - $23^{15}/_{16}$ | $7^{3}/_{16}$ | 6 | 20 | 10d | 20 | 10d x $1^{1}/_{2}$ | 7,355 | 7,650 | 7,650 | 3,360 |
| FWHH52925 - FWHH5224 | $5^{3}/_{8}$ | $9^{1}/_{8}$ - $23^{15}/_{16}$ | $8^{1}/_{2}$ | 6 | 20 | 10d | 20 | 10d x $1^{1}/_{2}$ | 7,650 | 7,650 | 7,650 | 3,360 |
| FWHH55925 - FWHH5524 | $5^{9}/_{16}$ | $9^{1}/_{8}$ - $23^{15}/_{16}$ | $8^{1}/_{2}$ | 6 | 20 | 10d | 20 | 10d x $1^{1}/_{2}$ | 7,615 | 7,615 | 7,615 | 3,360 |
| FWHH71118 - FWHH7124 | $7^{1}/_{8}$ | $11^{13}/_{16}$ - $23^{15}/_{16}$ | $10^{1}/_{4}$ | 6 | 20 | 10d | 20 | 10d x $1^{1}/_{2}$ | 6,005 | 6,005 | 6,005 | 3,360 |

**For SI**: 1 inch = 25.4mm, 1 lbs. = 4.45 N

[1]The tabulated allowable loads have been adjusted for load duration factors, $C_D$, as shown, in accordance with the NDS. The allowable loads do not apply to loads of other durations, and are not permitted to be adjusted for other load durations. See Sections 4.1 and 4.2 for additional design and installation requirements.

[2]The tabulated allowable loads shown are for installations on wood members complying with Section 3.6.2. Wood members must have a minimum reference compression perpendicular to grain design value, $F_{c\text{-perp}}$, of 625 psi (4.31 MPa).

[3]The tabulated allowable loads are for hangers attached to the wide face of a supporting solid sawn or SCL header.

[4]The tabulated allowable loads are for hangers prior to the attachment of wall and floor sheathing.

[5]See Section 3.6.3 for the required fastener dimensions and mechanical properties.

[6]FWHH hangers provide torsional resistance, which is defined as a moment of not less than 75 pounds (334 N) times the depth of the carried member at which the lateral movement of the top or bottom of the carried member with respect to the vertical position is 0.125 inch (3.2 mm). Trusses of all depths shall be braced to prevent rotation and to provide lateral stability as specified in the contract documents based on the requirements of the code.

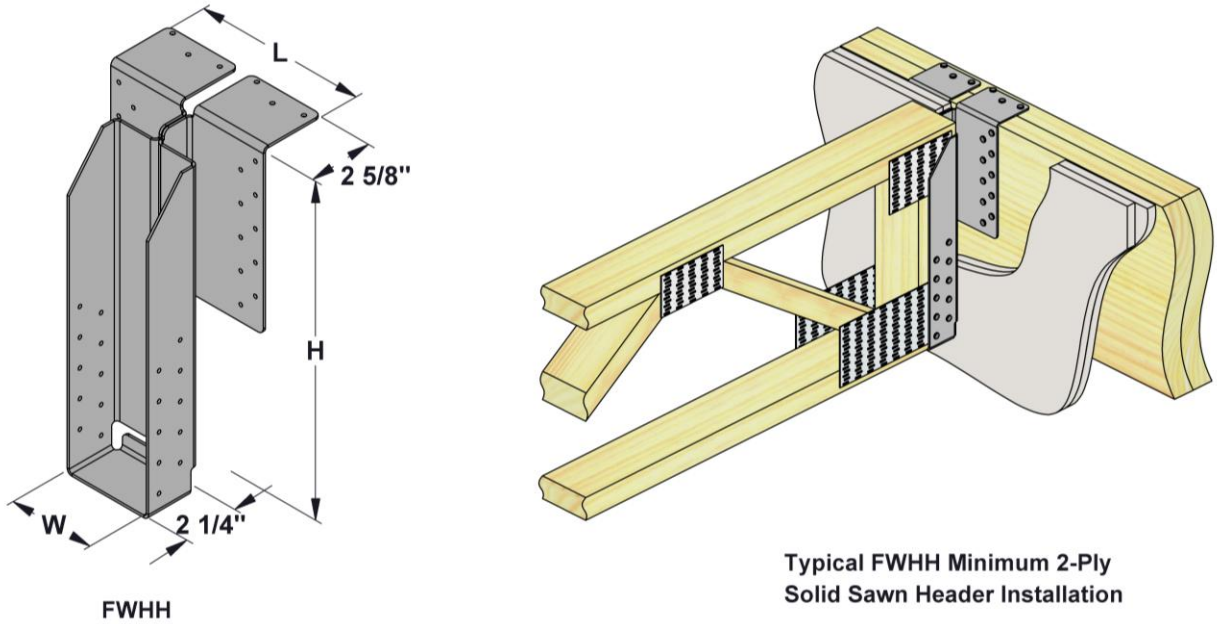


**FIGURE 4—FWHH HEAVY-DUTY FIRE WALL HANGER AND TYPICAL INSTALLATION ON SOLID SAWN HEADER**

**TABLE 5—ALLOWABLE LOADS FOR FWHL LIGHT DUTY FIRE WALL HANGERS[5,6]**

| STOCK NO. | STEEL GA. | DIMENSIONS (in.) | | | FASTENER SCHEDULE[4] | | | | | ALLOWABLE LOADS (lbs.)[1,2,3] | | | |
|---|---|---|---|---|---|---|---|---|---|---|---|---|---|
| | | | | | Header | | | Joist | | Download | | | Uplift |
| | | W | H | D | Top Qty. | Face Qty. | Type | Qty | Type | $C_D$ = 1.0 | $C_D$ = 1.15 | $C_D$ = 1.25 | $C_D$ = 1.6 |
| **Installation with Solid Sawn Joist** | | | | | | | | | | | | | |
| FWHL26 | 14 | $1^{9}/_{16}$" | $5^{7}/_{16}$" | $1^{7}/_{8}$" | 4 | 4 | 10d | 6 | 10d x $1^{1}/_{2}$ | 1,080 | 1,080 | 1,080 | 560 |
| FWHL28 | 14 | $1^{9}/_{16}$" | $7^{3}/_{16}$" | 2" | 4 | 4 | 10d | 8 | 10d x $1^{1}/_{2}$ | 1,555 | 1,555 | 1,555 | 475 |
| FWHL210 | 14 | $1^{9}/_{16}$" | $9^{3}/_{16}$" | 2" | 4 | 4 | 10d | 8 | 10d x $1^{1}/_{2}$ | 1,555 | 1,555 | 1,555 | 475 |
| FWHL212 | 14 | $1^{9}/_{16}$" | $11^{3}/_{16}$" | 2" | 4 | 4 | 10d | 8 | 10d x $1^{1}/_{2}$ | 1,555 | 1,555 | 1,555 | 475 |
| **Installation with Wood I-Joist** | | | | | | | | | | | | | |
| FWHL1795 | 14 | $1^{13}/_{16}$" | $9^{7}/_{16}$" | 2" | 4 | 4 | 10d | 6 | 10d x $1^{1}/_{2}$ | 1,350 | 1,350 | 1,350 | 380 |
| FWHL17118 | 14 | $1^{13}/_{16}$" | $11^{13}/_{16}$" | 2" | 4 | 4 | 10d | 6 | 10d x $1^{1}/_{2}$ | 1,350 | 1,350 | 1,350 | 380 |
| FWHL20118 | 14 | $2^{1}/_{8}$" | $11^{13}/_{16}$" | 2" | 4 | 4 | 10d | 6 | 10d x $1^{1}/_{2}$ | 1,350 | 1,350 | 1,350 | 380 |
| FWHL23118 | 14 | $2^{3}/_{8}$" | $11^{13}/_{16}$" | 2" | 4 | 4 | 10d | 6 | 10d x $1^{1}/_{2}$ | 1,350 | 1,350 | 1,350 | 380 |
| FWHL25118 | 14 | $2^{9}/_{16}$" | $11^{13}/_{16}$" | 2" | 4 | 4 | 10d | 6 | 10d x $1^{1}/_{2}$ | 1,350 | 1,350 | 1,350 | 380 |

For **SI**: 1 inch = 25.4 mm, 1 lbf = 4.45 N.

[1]Allowable loads have been adjusted for load duration factors, $C_D$, as shown, in accordance with the NDS. The allowable loads do not apply to loads of other durations and are not permitted to be adjusted for other load durations. See Sections 4.1 and 4.2 for additional design and installation requirements.
[2]Allowable loads shown are for installations on wood members complying with Section 3.6.2. Wood members must have a minimum reference compression perpendicular to grain design value, $F_{c\text{-perp}}$, of 625 psi (4.31 MPa).
[3]The tabulated allowable loads are for hangers prior to the attachment of wall and floor sheathing.
[4]See Section 3.6.3 for required fastener dimensions and mechanical properties.
[5]Web Stiffeners are required in I-Joist installations.
[6]FWHL hangers provide torsional resistance, which is defined as a moment of not less than 75 pounds (334 N) times the depth of the carried member at which the lateral movement of the top or bottom of the carried member with respect to the vertical position is 0.125 inch (3.2 mm). Trusses of all depths shall be braced to prevent rotation and to provide lateral stability as specified in the contract documents based on the requirements of the code.

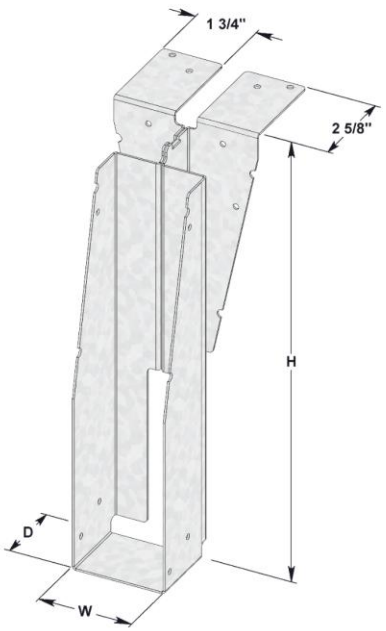


FWHL

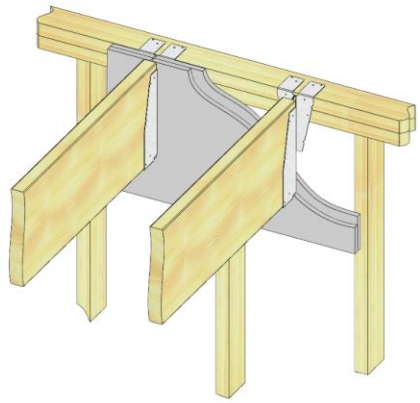

Typical FWHL Solid Sawn Joist Installation

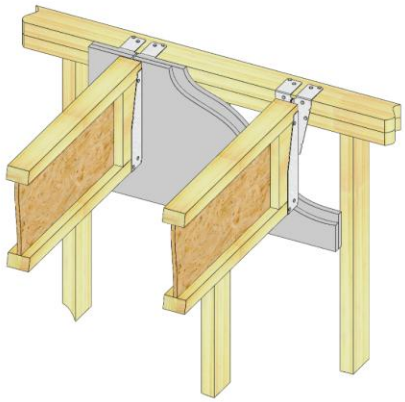

Typical FWHL I-Joist Installation

**FIGURE 5—FWHL LIGHT DUTY FIRE WALL HANGER AND TYPICAL INSTALLATION**

**DIVISION: 06 00 00—WOOD, PLASTICS AND COMPOSITES**
**Section: 06 05 23—Wood, Plastic, and Composite Fastenings**

**REPORT HOLDER:**

**MITEK® INC.**

**EVALUATION SUBJECT:**

**MITEK FIRE WALL HANGERS**

## 1.0 REPORT PURPOSE AND SCOPE

**Purpose:**

The purpose of this evaluation report supplement is to indicate that MiTek Fire Wall Hangers for connecting wood framing members, described in ICC-ES evaluation report ESR-4464, have also been evaluated for compliance with the codes noted below as adopted by the Los Angeles Department of Building and Safety (LADBS).

**Applicable code editions:**

- 2026 *City of Los Angeles Building Code* (LABC)
- 2026 *City of Los Angeles Residential Code* (LARC)

## 2.0 CONCLUSIONS

The MiTek Fire Wall Hangers for connecting wood framing members, described in Sections 2.0 through 7.0 of the evaluation report ESR-4464, comply with the LABC Chapter 23, and the LARC, and are subjected to the conditions of use described in this supplement.

## 3.0 CONDITIONS OF USE

The MiTek Fire Wall Hangers for connecting wood framing members, described in this evaluation report supplement must comply with all of the following conditions:

- All applicable sections in the evaluation report ESR-4464.
- The design, installation, conditions of use and identification are in accordance with the 2024 *International Building Code®* (IBC) or 2024 *International Residential Code®* (IRC) provisions, as applicable, noted in the evaluation report ESR-4464.
- The design, installation and inspection are in accordance with additional requirements of LABC Chapters 16 and 17, as applicable.
- The supported end of joist or beam must be within $^{1}/_{4}$-inch from the supporting member.
- Solid blocking must be required for all joist hangers supporting roof joists having one end twisted more than one-half degree per foot of length relative to the other end, except as specifically noted in the evaluation report.
- Under the LARC, an engineered design in accordance with LARC Section R301.1.3 must be submitted.

This supplement expires concurrently with the evaluation report, reissued October 2025 and revised July 2026.

*ICC-ES Evaluation Reports are not to be construed as representing aesthetics or any other attributes not specifically addressed, nor are they to be construed as an endorsement of the subject of the report or a recommendation for its use. There is no warranty by ICC Evaluation Service, LLC, express or implied, as to any finding or other matter in this report, or as to any product covered by the report.*

Copyright © 2026 ICC Evaluation Service, LLC. All rights reserved.

**DIVISION: 06 00 00—WOOD, PLASTICS AND COMPOSITES**
**Section: 06 05 23—Wood, Plastic, and Composite Fastenings**

**REPORT HOLDER:**

**MITEK® INC.**

**EVALUATION SUBJECT:**

**MITEK FIRE WALL HANGERS**

## 1.0 REPORT PURPOSE AND SCOPE

**Purpose:**

The purpose of this evaluation report supplement is to indicate that MiTek Fire Wall Hangers, described in ICC-ES evaluation report ESR-4464, have also been evaluated for compliance with the code*(s)* noted below.

**Applicable code edition*(s)*:**

- 2025 and 2022 *California Building Code* (CBC)

For evaluation of applicable Chapters adopted by the California Office of Statewide Health Planning and Development (OSHPD) AKA: California Department of Health Care Access and Information (HCAI) and the Division of State Architect (DSA), see Sections 2.1.1 and 2.1.2 below.

- 2025 and 2022 *California Residential Code* (CRC)

## 2.0 CONCLUSIONS

### 2.1 CBC:

The MiTek Fire Wall Hangers, described in Sections 2.0 through 7.0 of the evaluation report ESR-4464, comply with CBC Chapters 23, provided the design and installation are in accordance with the 2024 and 2021 *International Building Code®* (IBC) provisions noted in the evaluation report and the additional requirements of CBC Chapter 16, 17 and 23, as applicable.

#### 2.1.1 OSHPD:

The applicable OSHPD Sections and Chapters of the CBC are beyond the scope of this supplement.

#### 2.1.2 DSA:

The applicable DSA Sections and Chapters of the CBC are beyond the scope of this supplement.

### 2.2 CRC:

The MiTek Fire Wall Hangers, described in Sections 2.0 through 7.0 of the evaluation report ESR-4464, comply with CRC Chapter 3, provided the design and installation are in accordance with the 2024 and 2021 *International Residential Code®* (IRC) provisions noted in the evaluation report and the additional requirements of CRC Chapter 3, as applicable.

This supplement expires concurrently with the evaluation report, reissued October 2025 and revised July 2026.

*ICC-ES Evaluation Reports are not to be construed as representing aesthetics or any other attributes not specifically addressed, nor are they to be construed as an endorsement of the subject of the report or a recommendation for its use. There is no warranty by ICC Evaluation Service, LLC, express or implied, as to any finding or other matter in this report, or as to any product covered by the report.*

Copyright © 2026 ICC Evaluation Service, LLC. All rights reserved.

**DIVISION: 06 00 00—WOOD, PLASTICS AND COMPOSITES**
**Section: 06 05 23—Wood, Plastic, and Composite Fastenings**

**REPORT HOLDER:**

**MITEK® INC.**

**EVALUATION SUBJECT:**

**MITEK FIRE WALL HANGERS**

## 1.0 REPORT PURPOSE AND SCOPE

**Purpose:**

The purpose of this evaluation report supplement is to indicate that the MiTek Fire Wall Hangers, described in ICC-ES evaluation report ESR-4464, have also been evaluated for compliance with the codes noted below.

**Applicable code editions:**

- 2026 and 2023 *Florida Building Code—Building*
- 2026 and 2023 *Florida Building Code—Residential*

## 2.0 CONCLUSIONS

The MiTek Fire Wall Hangers, described in Sections 2.0 through 7.0 of the evaluation report ESR-4464, comply with the *Florida Building Code—Building*, and the *Florida Building Code—Residential*. The design requirements must be determined in accordance with the *Florida Building Code—Building* or the *Florida Building Code—Residential*, as applicable. The installation requirements noted in ICC-ES evaluation report ESR-4464 for the 2024 and 2021 *International Building Code®* meet the requirements of the *Florida Building Code—Building* or the *Florida Building Code—Residential*, as applicable, with the following conditions:

- For use within 3,000 feet of a saltwater coastline, fasteners and connectors must comply with Section 1711 and Table 1711.1 of the 2026 *Florida Building Code—Building* or Section R332 and Table R332.1 of the 2026 *Florida Building Code—Residential*, as applicable.
- The MiTek Fire Wall Hangers described in the evaluation report are structural connectors used for connecting wood framing members in accordance with Section 2304.10.3 of the *Florida Building Code—Building*. The connectors may also be used in structures regulated under the *Florida Building Code—Residential* when an engineered design is submitted to, and approved by, the code official, in accordance with Section R301.1.3 of the *Florida Building Code—Residential*.
- Connectors and fasteners used in contact with preservative-treated or fire-retardant-treated wood must comply with Section 2304.10.5 of the *Florida Building Code—Building* or Section R317.3 of the *Florida Building Code—Residential*, as applicable.

Use of the MiTek Fire Wall Hangers has also been found to be in compliance with the High-Velocity Hurricane Zone provisions of the *Florida Building Code—Building*, and the *Florida Building Code—Residential* with the following condition:

a. For connections subject to uplift, the connection must be designed for no less than 700 pounds (3114 N).

For products falling under Florida Rule 61G20-3, verification that the report holder's quality assurance program is audited by a quality assurance entity approved by the Florida Building Commission for the type of inspections being conducted is the responsibility of an approved validation entity (or the code official when the report holder does not possess an approval by the Commission). Florida Rule 61G20-3 is applicable to products and/or systems which comprise the building envelope and structural frame for compliance with the structural requirements of the Florida Building Code.

This supplement expires concurrently with the evaluation report, reissued October 2025 and revised July 2026.

*ICC-ES Evaluation Reports are not to be construed as representing aesthetics or any other attributes not specifically addressed, nor are they to be construed as an endorsement of the subject of the report or a recommendation for its use. There is no warranty by ICC Evaluation Service, LLC, express or implied, as to any finding or other matter in this report, or as to any product covered by the report.*

Copyright © 2026 ICC Evaluation Service, LLC. All rights reserved.